RED SEAL MEASUREMENT

Home of neptune Liquid Measurement Systems

QSG-622-1
Rev. A

PD6830 Wiring Instructions - Quick Start Guide

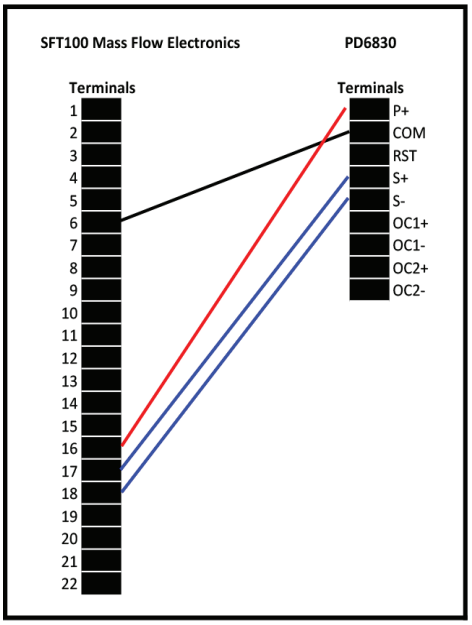

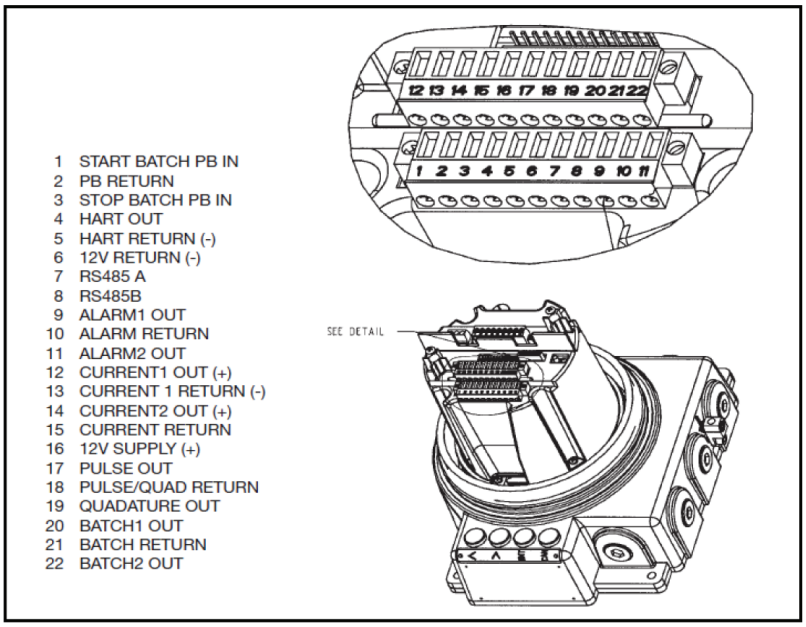

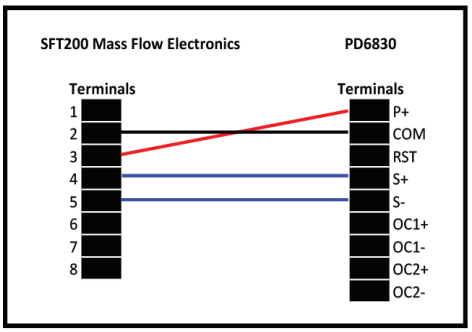
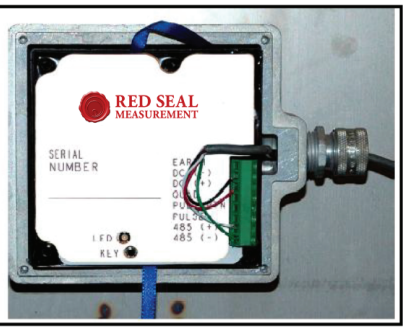
1. Earth Ground
2. Electrical Ground
3. +12.5-30 VDC
4. Pulse A (Primary)
5. Pulse Return
6. Pulse B (Quadrature)
7. RS-485 +
8. RS-485 -